AB-24 | Stacked module connection

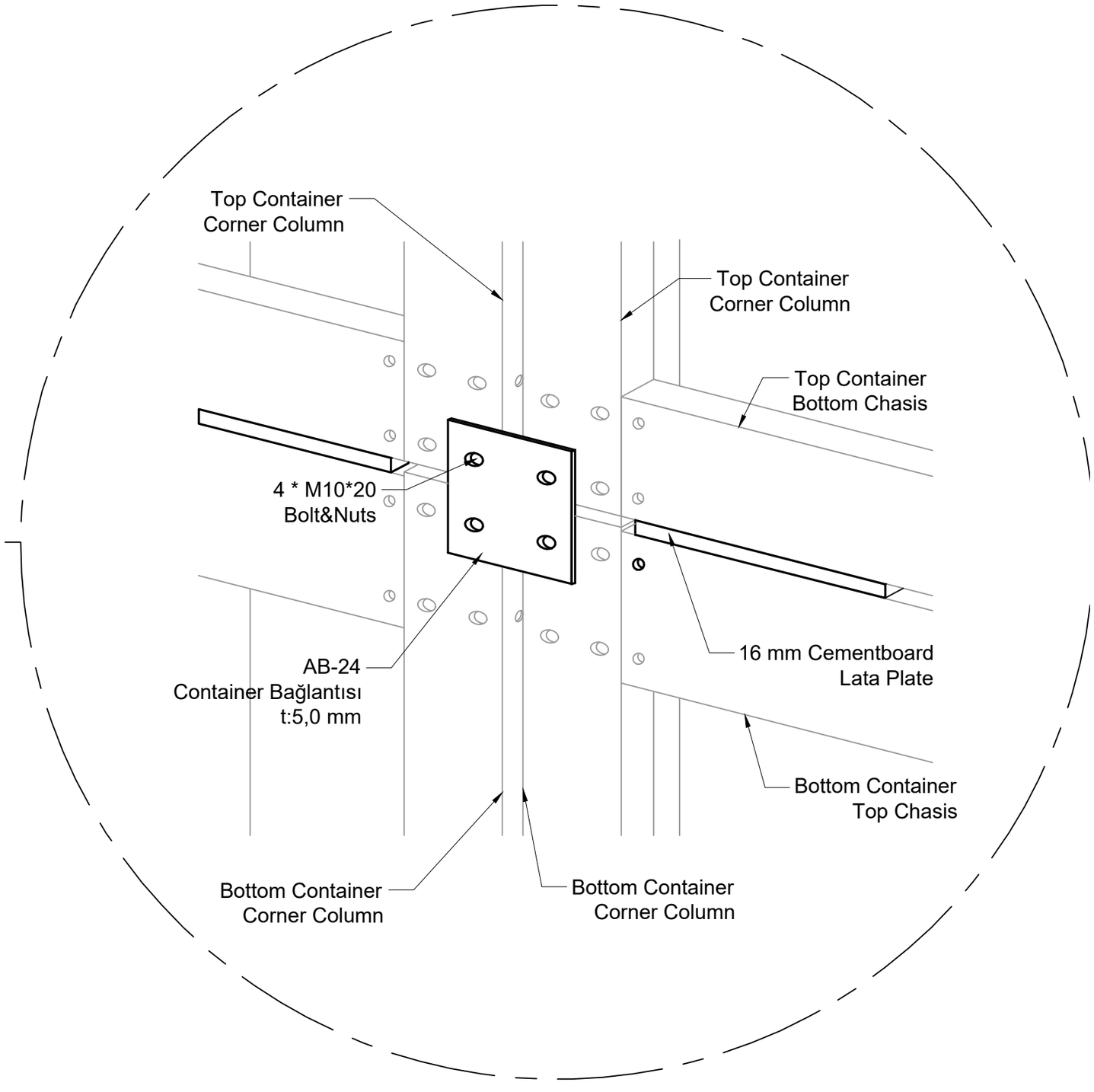

Connection plate: 5.0 mm | 4 × M10 × 20 bolts and nuts | Upper-module corner columns and bottom chassis | Lower-module corner columns and top chassis | 16 mm cement-board lath plate

AB-23 | Stacked corner and support

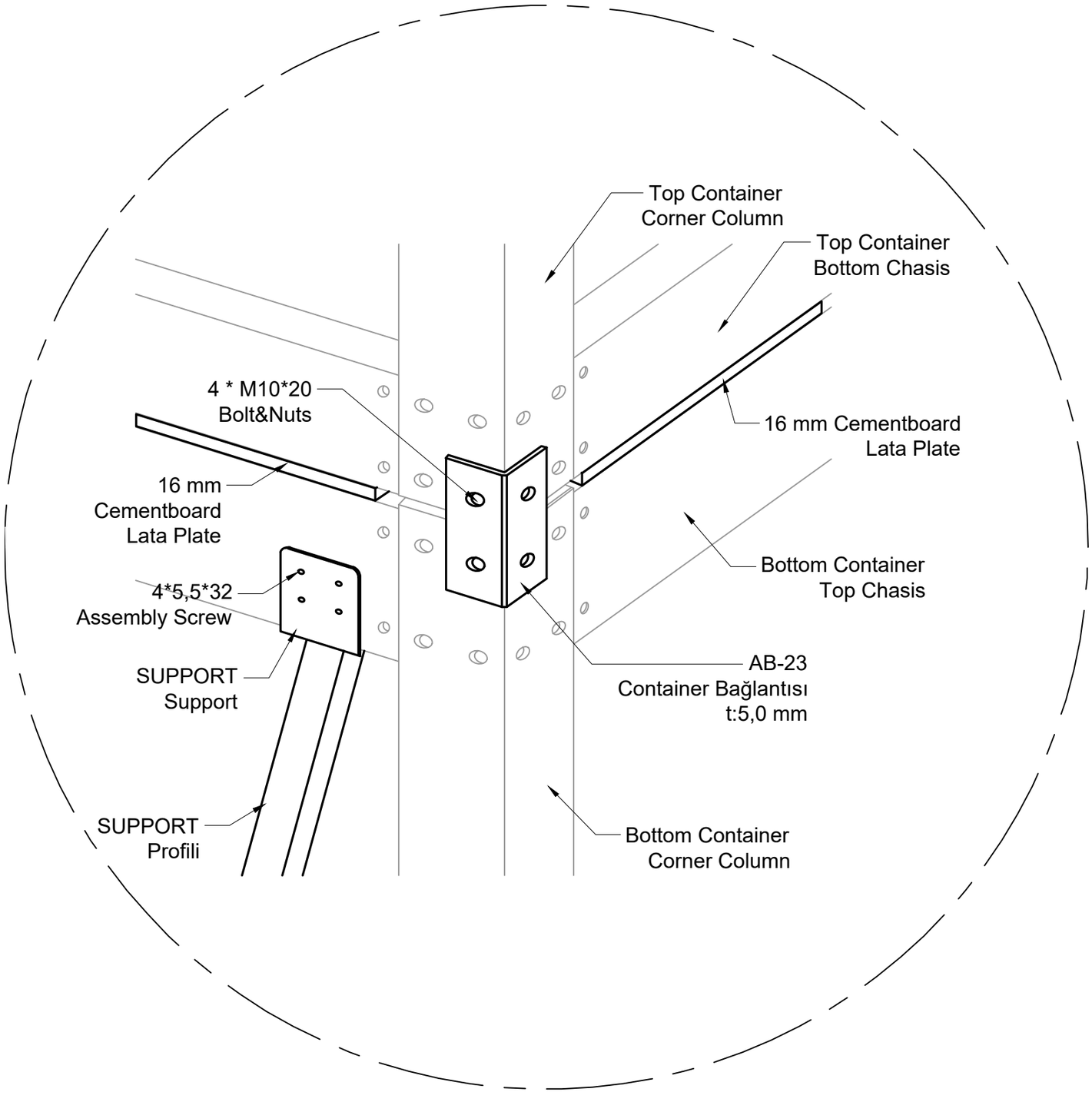

Connection bracket: 5.0 mm | 4 × M10 × 20 bolts and nuts | 4 × 5.5 × 32 assembly screws | 16 mm cement-board lath plate | Support profile at the module junction

AB-26 | Platform support connection

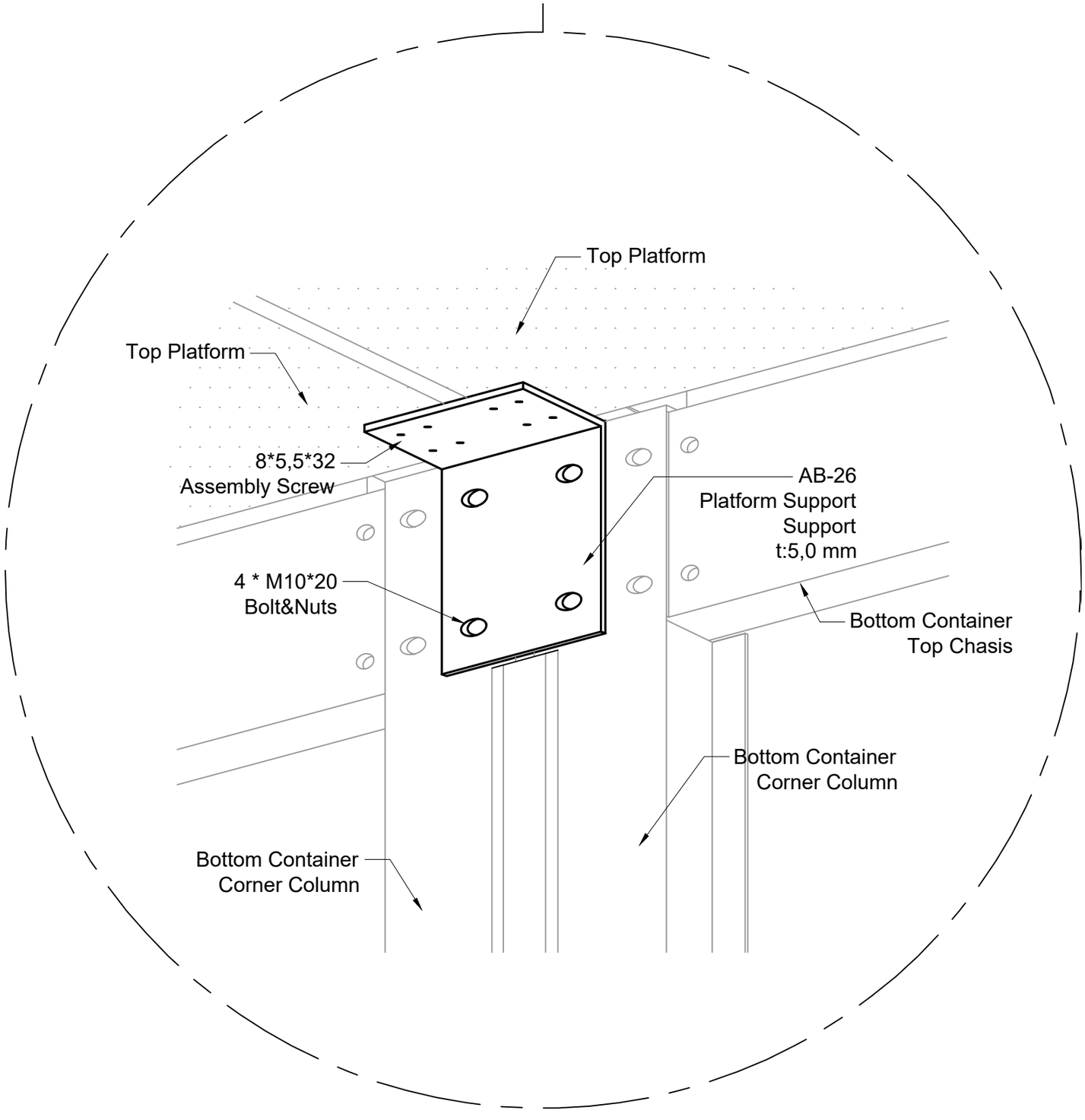

Platform support bracket: 5.0 mm | 4 × M10 × 20 bolts and nuts | 8 × 5.5 × 32 assembly screws | Platform-to-upper-chassis connection | Lower-module corner columns

AB-25 | Platform and frame support

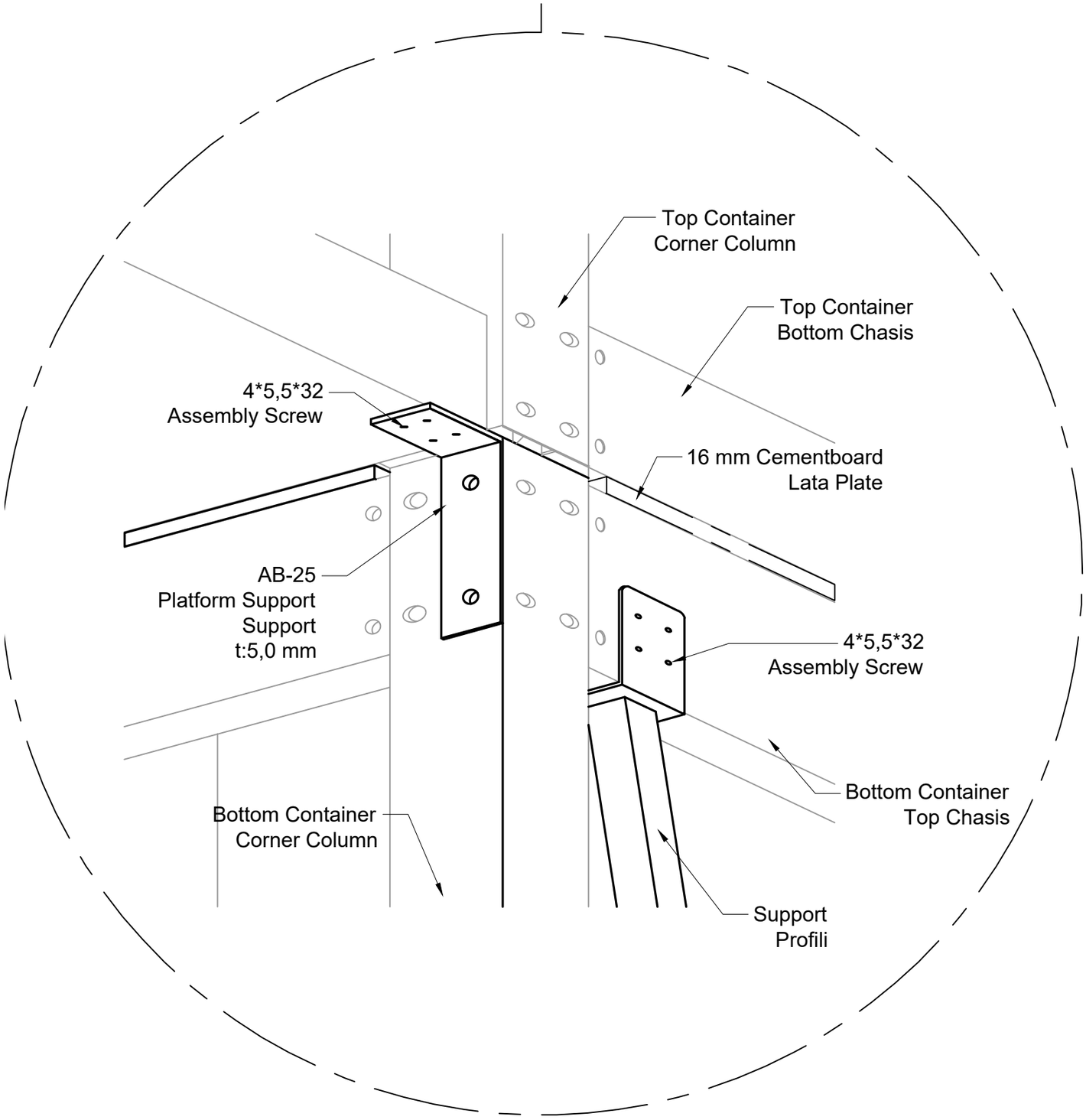

Platform support bracket: 5.0 mm | 4 × 5.5 × 32 assembly screws at the indicated joints | 16 mm cement-board lath plate | Upper-module bottom chassis / lower-module top chassis | Support profile

Roof | Cement-board lath arrangement

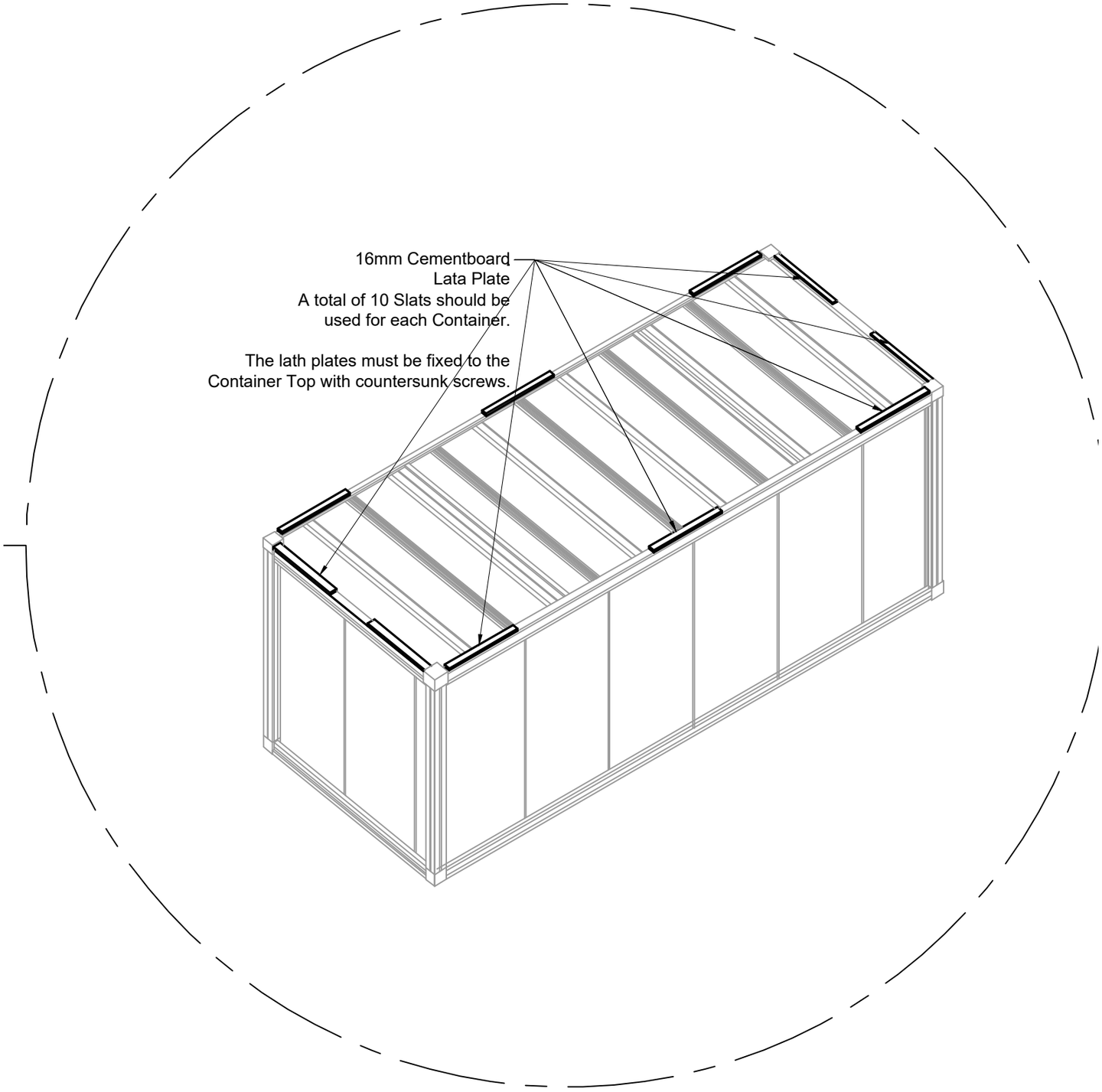

16 mm cement-board lath plates | 10 lath plates per container in this reference detail | Fix lath plates to the container top with countersunk screws

Roof | Panel and frame fixings

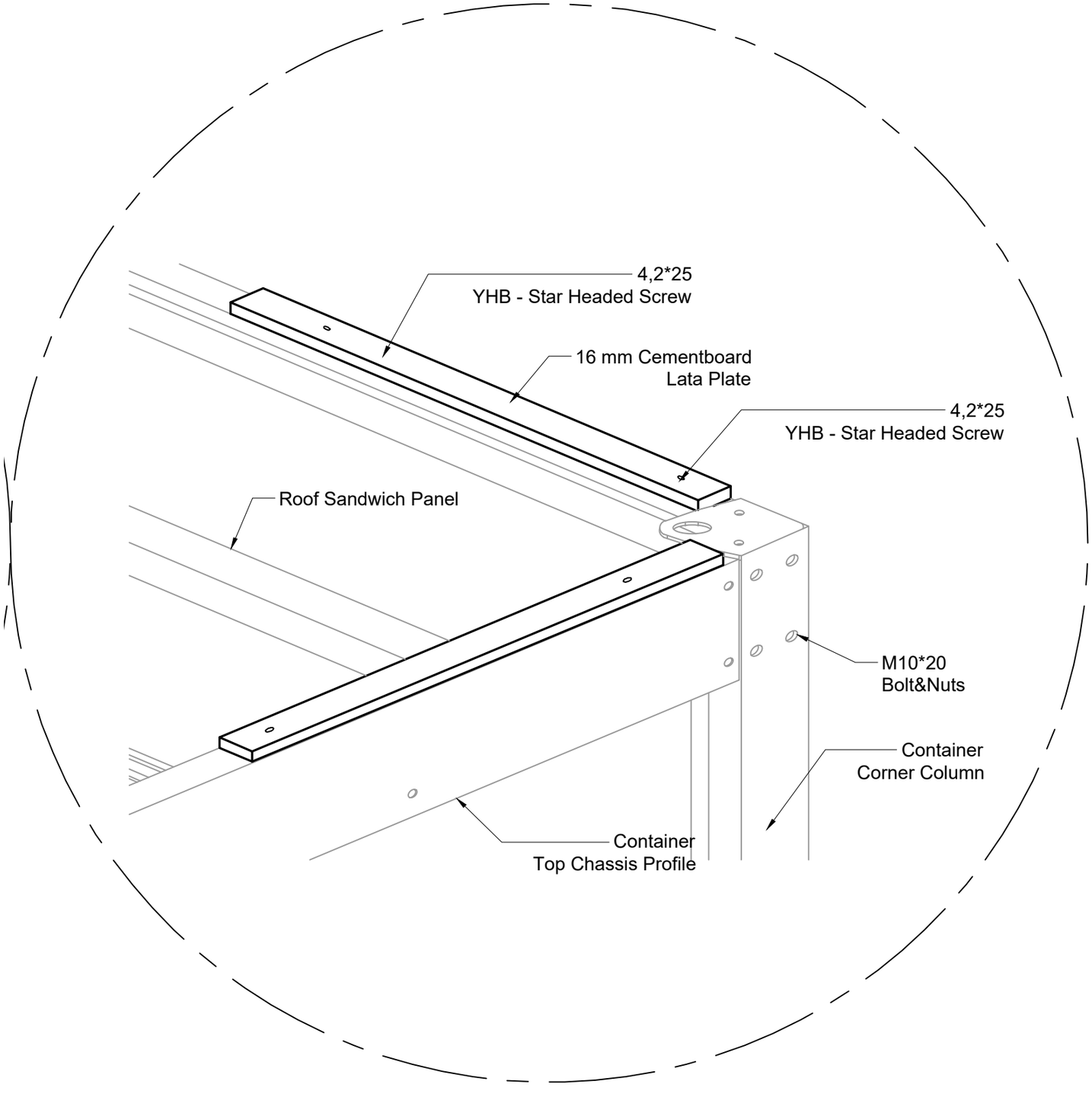

Roof sandwich panel | 16 mm cement-board lath plate | 4.2 × 25 countersunk star-head screws | M10 × 20 bolts and nuts | Container top-chassis profile and corner column

AB-21 | Platform-side base anchoring

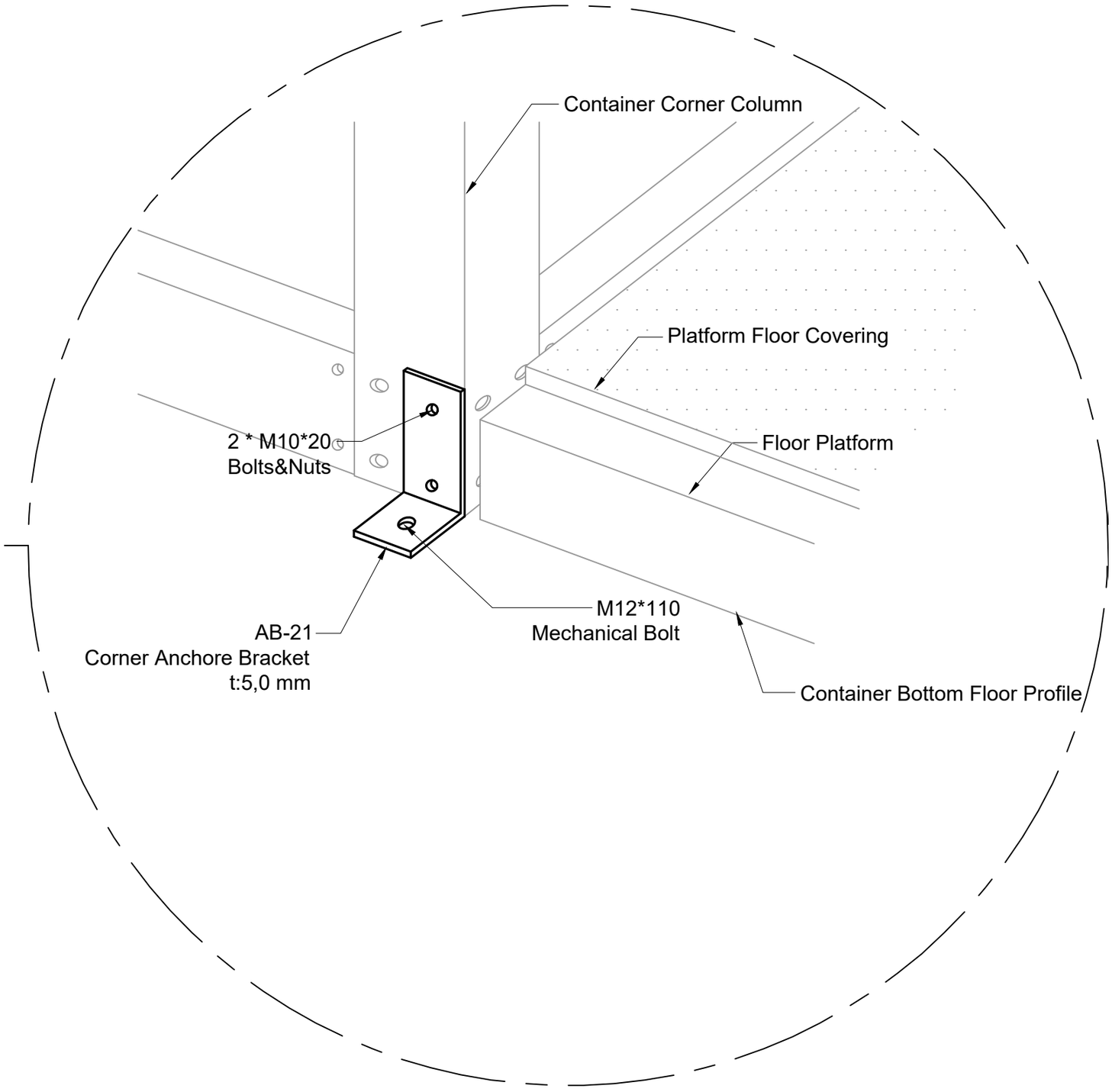

Corner anchor bracket: 5.0 mm | 2 × M10 × 20 bolts and nuts | M12 × 110 mechanical anchor | Platform floor covering and floor platform | Container bottom-floor profile

AB-21 | Corner base anchoring

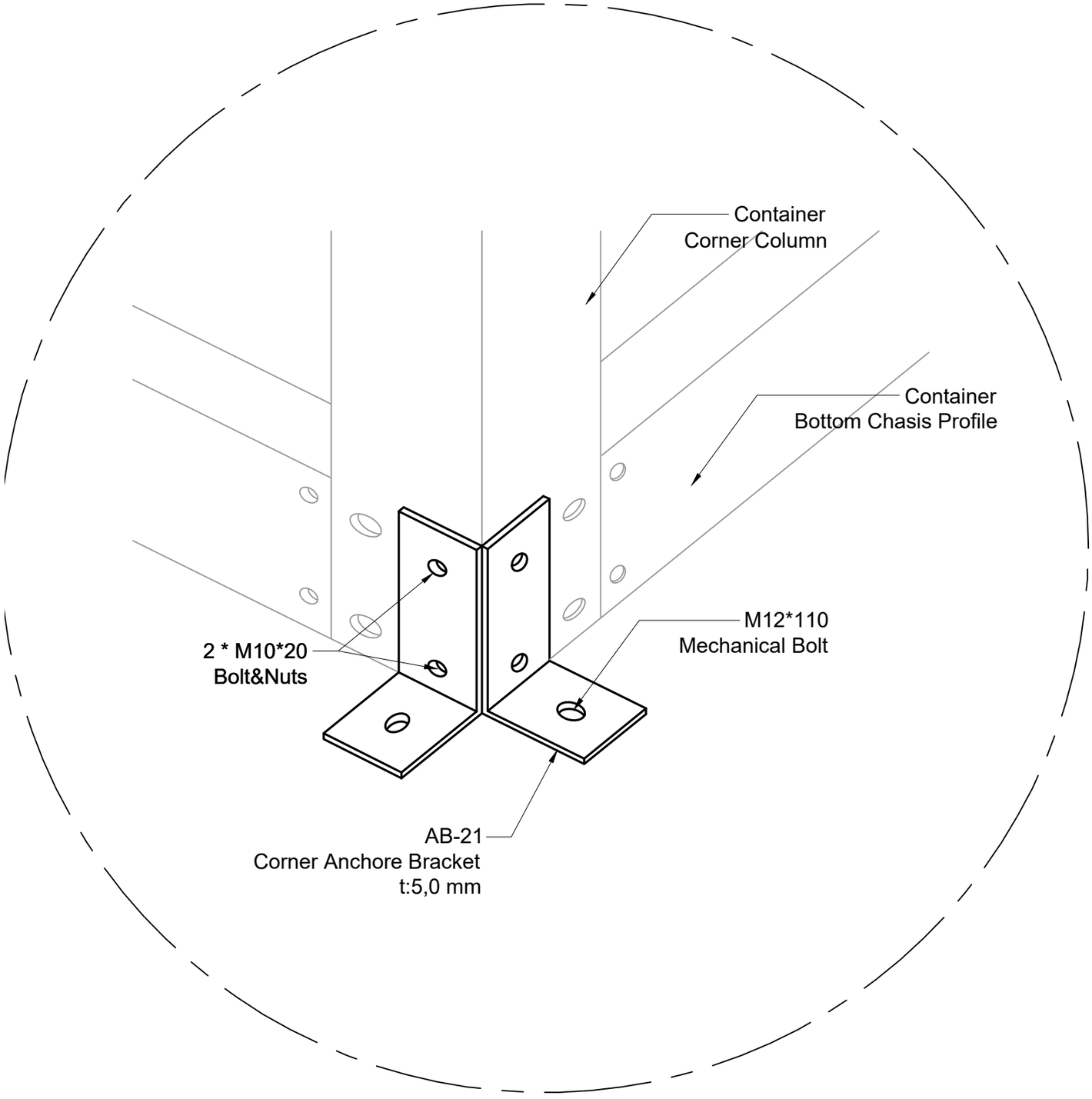

Corner anchor bracket: 5.0 mm | 2 × M10 × 20 bolts and nuts | M12 × 110 mechanical anchor | Container corner column and bottom-chassis profile